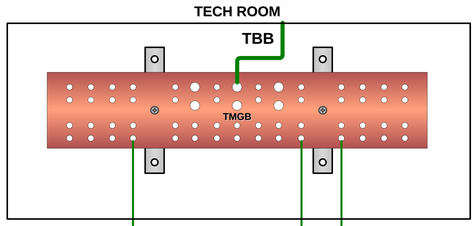

J-BOX 108 – TERRACE SPEAKERS

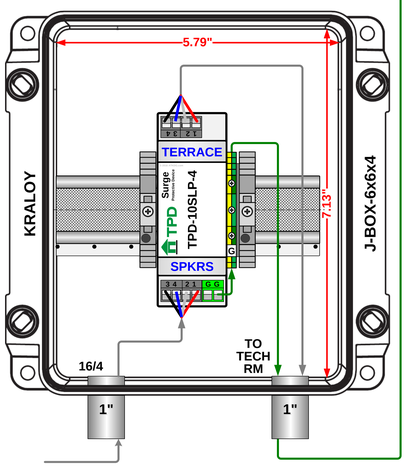

J-BOX 120 – POOL EQUIPMENT

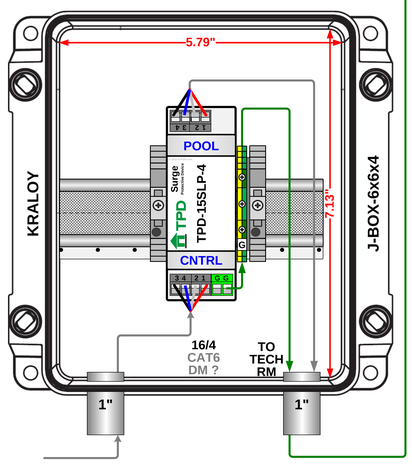

J-BOX DMRC – DEMARC SVS

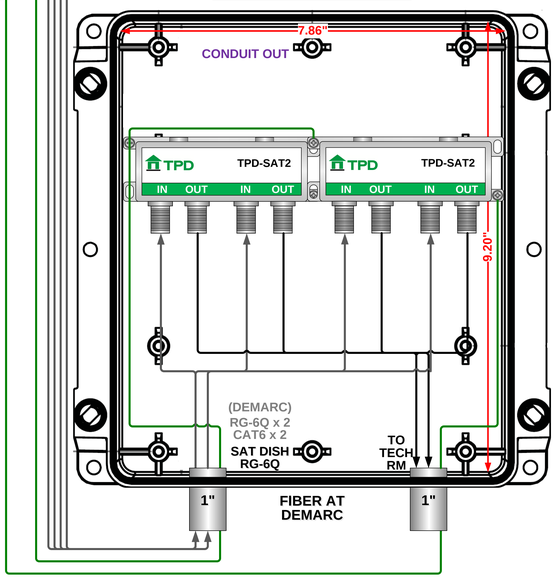

J-BOX 100 – MAIN - GUEST HOUSE LINKS

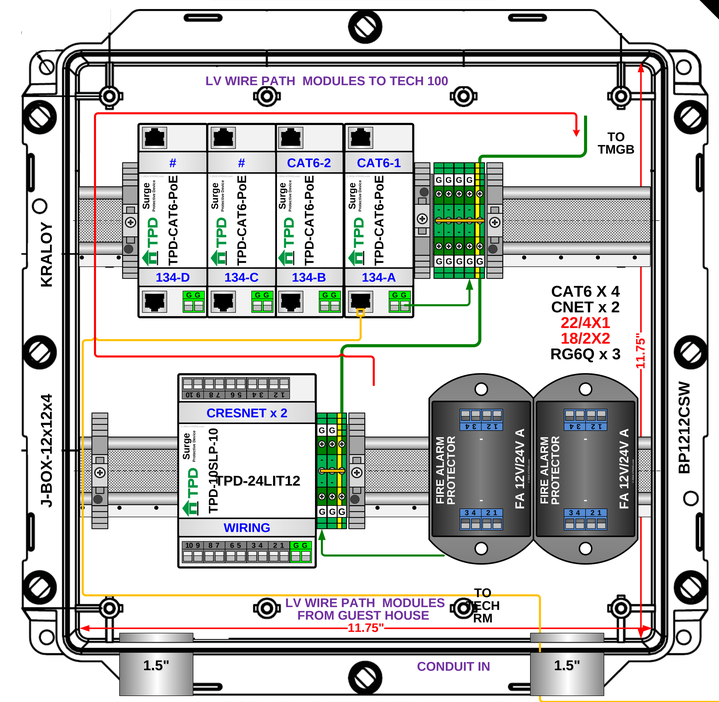

J-BOX 138 – GUEST HOUSE - MAIN LINKS

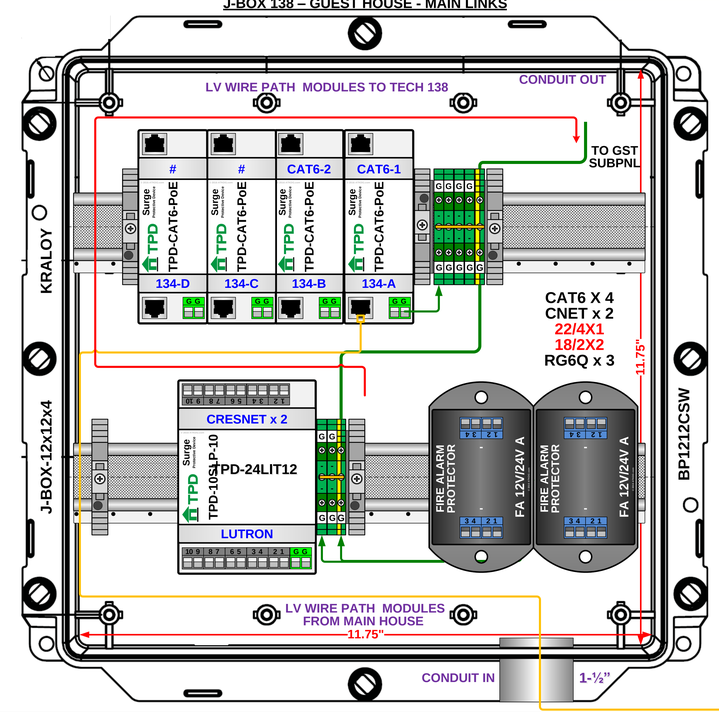

J-BOX GRH – GREENHOUSE LINKS

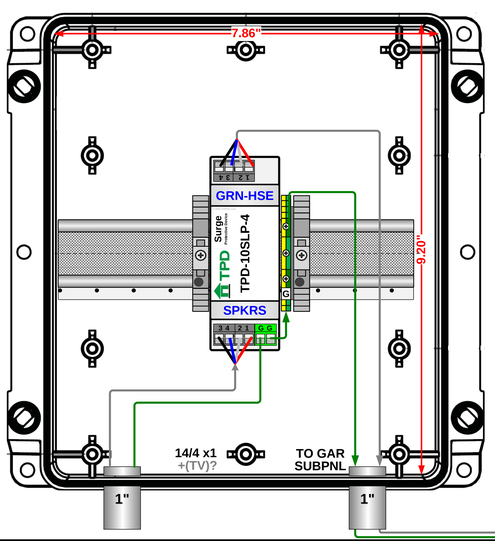

J-BOX GAR – GREENHOUSE LINKS

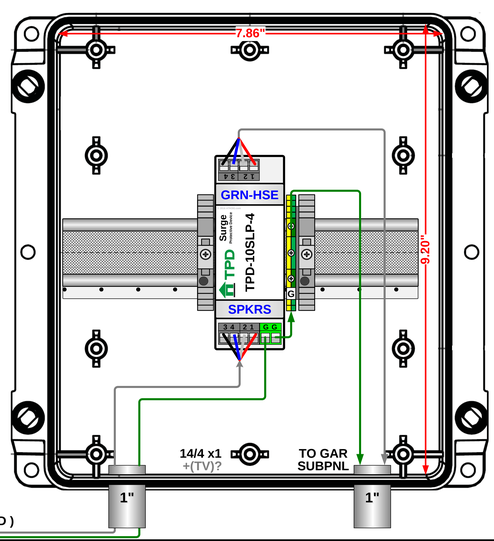

(TBD)

TPD transient protection design™
Transient Protection Design

4311 William Penn Hwy
Mifflintown, PA 17059

888-281-7856
717-436-2869

www.tpdsurge.com

Call for Design Information or Technical Help

1.888.281.7856

BRANDON BREAUX
ARCHITECTS

TEXAS CUSTOM HOMES
CONSTRUCTION

Client Residence

City
State

SMART HOME TECHNOLOGY DESIGN

4K DIGITAL MEDIA
HOME THEATER
COMMUNICATIONS
ENTERPRISE LAN
SECURITY / CCTV
HVAC CONTROL
SHADE CONTROL
LIGHTING CONTROL
POWER ISOLATION
POWER MONITORING

J-BOX WIRING DETAILS

SCALE: 1.0 in = 1.0 in.
DATE: 07.14.2016

X-0.91

Copyright © 1999-2016 ArchitechKnowlogy Design Group - ATKDG.com All Rights Reserved.